`

YUEQING DAIER ELECTRON CO., LTD.
乐清市戴尔电子有限公司

技术特性规格书
Specifications

19MM KEY SWITCH

产品名称： 电子锁

Product Name: Key lock switch

型 号： **K19-05**

Model (Part No): K19-05

公司地址：中国浙江省乐清市柳市镇柳黄路 1636 号
Address:No.1636 Liuhuang road ,Liushi town, Yueqing City ,Zhejiang Province,China
原产国：中国.浙江.温州
Country of origin: WenZhou,Zhejiang.China
电话：+86-577-27870727 传真：+86-577-62766372
TEL: +86-577-27870727 FAX:+86-577-62766372
邮编**:** 325602 Zip code: 325602

1. Scope　适用范围

This specification is applied to Switch used for electronic equipment and appliance.

此规格书适应电子及电器设备上的开关。

2. Construction 外观尺寸

The external dimensions of this product and its internal tolerances are based on relevant drawings.

本产品外形及内部结构配合（公差）尺寸，均以图纸为准。

3. Material 材料

Refer to the material sheet showed in the drawing.

均以图纸所列材料为准。

4. Applied environment 使用环境

(1) Temperature 温度: -20° C ~+85° C

(2)Relative humidity 相对湿度:35%~ 85%

(3) Air pressure 气压:86Kpa~106Kpa

5. Electrical properties 电气性能指标

No. 序号	Items 项目	Technical conditions 技术条件	Technical requirements 技术要求	Memo 备注
5.1.	Rating load 额定负荷	125V AC 250V AC 28V DC	4A 2A 4A	
5.2	Withstand Voltage 耐电压	AC　1000V(50 Hz) 1min 2mA	No abnormality, no breakdown,no over arc. 无异常、无击穿、飞弧	
5.3	Contact resistance 接触电阻	All terminals will be test but not include Socket ground pin and swetch part. 全部端子进行测试不包括插座，接地片以及开关部分。	≤20mΩ	
5.4	Insulation resistance 绝缘电阻	Test voltage:500V DC 1min±5s. 测试电压：500V DC 1 分钟±5 秒 Test position:Between all terminals between terminals and base.测试位置：在开路端子之间；在端子与基座之间。	≥100MΩ 500V DC	

No. 序号	Items 项目	Technical conditions 技术条件	Technical requirements 技术要求	Memo 备注
5.5	Mechanical life 机械寿命	Inserting and extracting 10000times min. 在无负荷情况下旋转≥10000 次。	Terminal can't looseness,damage And breakage,and according to Item4. 端子无松动损坏并符合第 4 项要求。	

6. SWITCH AND LOCK FUNCTION:

SINGLE & DOUBLE POLE SWITCHES							
MODEL NO.	NO. POLES	Connected Terminals			Key Pull Positions	Lock Configuration	Indexing
		POS. 1	POS. 2	POS. 3			
K19-05-102	Single Pole	7-8	8-2		Positions 1&2	POS. 1 2	90°
K19-05-202	Double Poles	7-8 3-4	8-2 4-6		Positions 1&2	POS. 1 2	90°
K19-05-102A	Single Pole	7-8	8-2		Position 1	POS. 1 2	90°
K19-05-202A	Double Poles	7-8 3-4	8-2 4-6		Position 1	POS. 1 2	90°
K19-05-103	Single Pole	7-8	8-1	1-2	Positions 1、2&3	POS. 1 2 3	45°
K19-05-203	Double Poles	7-8 3-4	8-1 4-5	1-2 5-6	Positions 1、2&3	POS. 1 2 3	45°
K19-05-103B	Single Pole	7-8	8-1	1-2	Position 3	POS. 1 2 3	45°
K19-05-203B	Double Poles	7-8 3-4	8-1 4-5	1-2 5-6	Position 3	POS. 1 2 3	45°
K19-05-113	Single Pole	7-8	8-1	1-2	Positions 2&3	▼ =Momentary 1 2 3	45°
K19-05-123	Single Pole	7-8	8-1	1-2	Position 2	▼ =Momentary 1 2 3	45°
K19-05-213	Double Poles	7-8 3-4	8-1 4-5	1-2 5-6	Positions 2&3	▼ =Momentary 1 2 3	45°
K19-05-223	Double Poles	7-8 3-4	8-1 4-5	1-2 5-6	Position 2	▼ =Momentary 1 2 3	45°
K19-05-112	Single Pole	7-8	8-2		Position 2	▼ =Momentary 1 2	90°
K19-05-212	Double Poles	7-8 3-4	8-2 4-6		Position 2	▼ =Momentary 1 2	90°
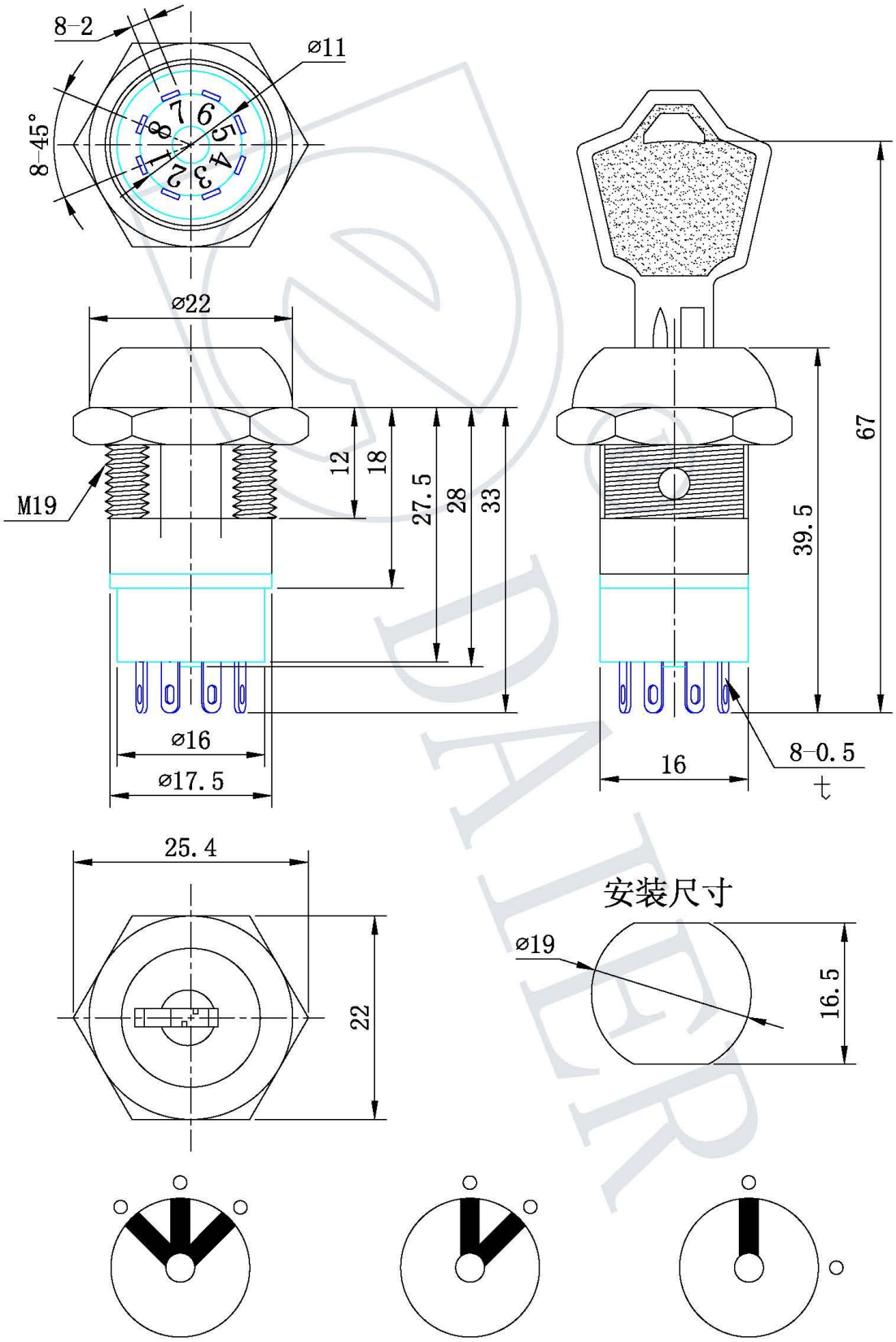
7.Attachment: product drawing